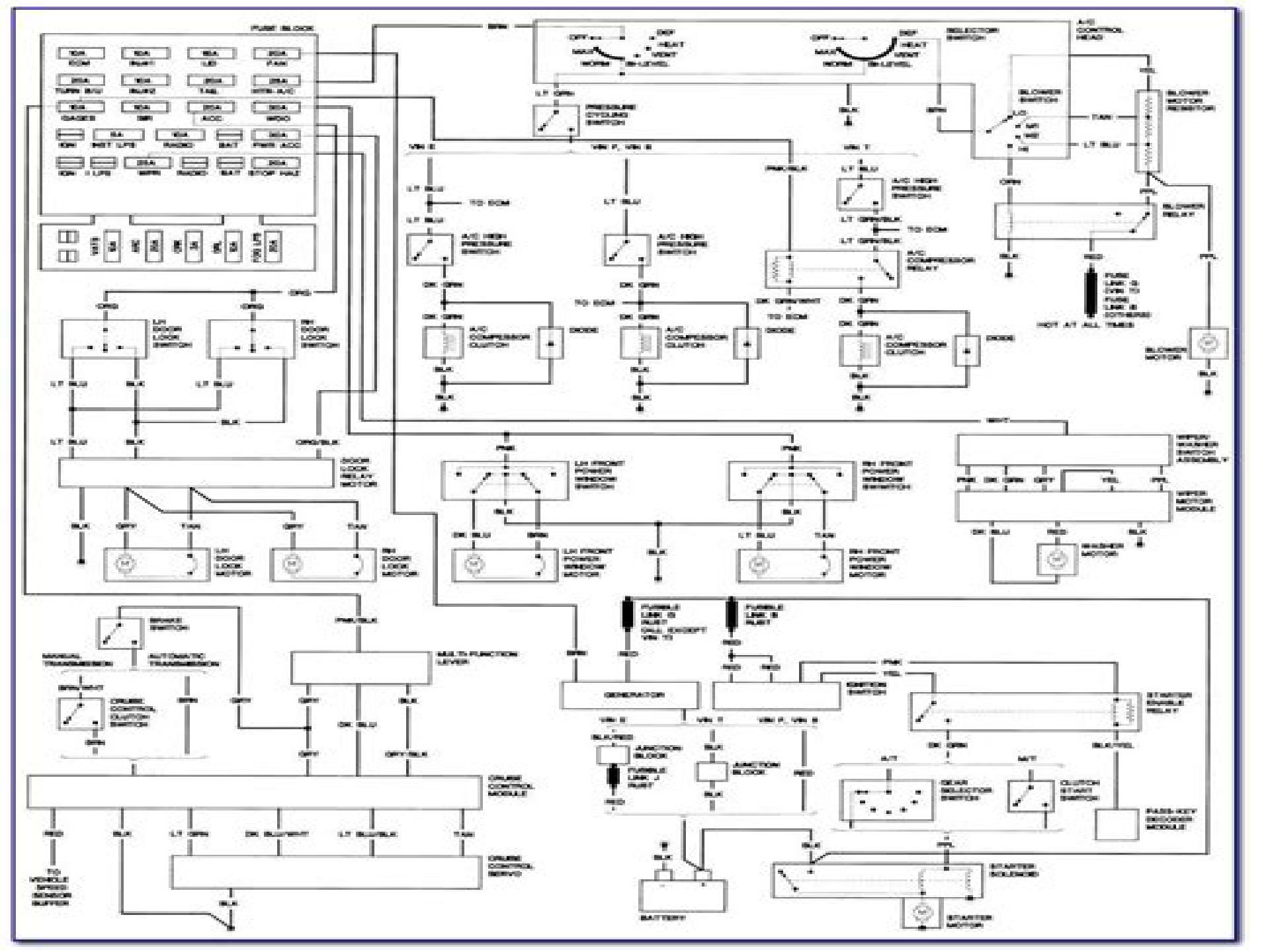
FUSE BLOCK
SELECTOR SWITCH
A/C CONTROL HEAD
BLOWER SWITCH
BLOWER MOTOR RESISTOR
PRESSURE CYCLING SWITCH
A/C HIGH PRESSURE SWITCH
A/C COMPRESSOR RELAY
BLOWER RELAY
HOT AT ALL TIMES
BLOWER MOTOR
A/C COMPRESSOR CLUTCH
DIODE
LH DOOR LOCK SWITCH
RH DOOR LOCK SWITCH
DOOR LOCK RELAY MOTOR
LH DOOR LOCK MOTOR
RH DOOR LOCK MOTOR
LH FRONT POWER WINDOW SWITCH
RH FRONT POWER WINDOW SWITCH
LH FRONT POWER WINDOW MOTOR
RH FRONT POWER WINDOW MOTOR
WIPER/WASHER SWITCH ASSEMBLY
WIPER MOTOR MODULE
WASHER MOTOR
BRAKE SWITCH
MANUAL TRANSMISSION
AUTOMATIC TRANSMISSION
MULTI-FUNCTION LEVER
CRUISE CONTROL CLUTCH SWITCH
CRUISE CONTROL MODULE
CRUISE CONTROL SERVO
TO VEHICLE SPEED SENSOR BUFFER
GENERATOR
IGNITION SWITCH
STARTER ENABLE RELAY
JUNCTION BLOCK
FUSIBLE LINK J RUST
GEAR SELECTOR SWITCH
CLUTCH START SWITCH
PASS-KEY DECODER MODULE
BATTERY
STARTER SOLENOID
STARTER MOTOR

Www Eresearchengine Net Index Phpsearchwiring Diagram For 1985 Chevy Monte Carlo

J Dewey

Www Eresearchengine Net Index Phpsearchwiring Diagram For 1985 Chevy Monte Carlo:

Thank you for reading **Www Eresearchengine Net Index Phpsearchwiring Diagram For 1985 Chevy Monte Carlo**. As you may know, people have search numerous times for their chosen novels like this Www Eresearchengine Net Index Phpsearchwiring Diagram For 1985 Chevy Monte Carlo, but end up in harmful downloads.
Rather than enjoying a good book with a cup of tea in the afternoon, instead they cope with some infectious virus inside their desktop computer.

Www Eresearchengine Net Index Phpsearchwiring Diagram For 1985 Chevy Monte Carlo is available in our digital library an online access to it is set as public so you can get it instantly.
Our books collection hosts in multiple locations, allowing you to get the most less latency time to download any of our books like this one.
Kindly say, the Www Eresearchengine Net Index Phpsearchwiring Diagram For 1985 Chevy Monte Carlo is universally compatible with any devices to read

https://letsgetcooking.org.uk/public/scholarship/default.aspx/pyramid_asia_english_edition.pdf

Table of Contents Www Eresearchengine Net Index Phpsearchwiring Diagram For 1985 Chevy Monte Carlo

1. Understanding the eBook Www Eresearchengine Net Index Phpsearchwiring Diagram For 1985 Chevy Monte Carlo
    - The Rise of Digital Reading Www Eresearchengine Net Index Phpsearchwiring Diagram For 1985 Chevy Monte Carlo
    - Advantages of eBooks Over Traditional Books
2. Identifying Www Eresearchengine Net Index Phpsearchwiring Diagram For 1985 Chevy Monte Carlo
    - Exploring Different Genres
    - Considering Fiction vs. Non-Fiction
    - Determining Your Reading Goals
3. Choosing the Right eBook Platform
    - Popular eBook Platforms
    - Features to Look for in an Www Eresearchengine Net Index Phpsearchwiring Diagram For 1985 Chevy Monte

Carlo
    - User-Friendly Interface
4. Exploring eBook Recommendations from Www Eresearchengine Net Index Phpsearchwiring Diagram For 1985 Chevy Monte Carlo
    - Personalized Recommendations
    - Www Eresearchengine Net Index Phpsearchwiring Diagram For 1985 Chevy Monte Carlo User Reviews and Ratings
    - Www Eresearchengine Net Index Phpsearchwiring Diagram For 1985 Chevy Monte Carlo and Bestseller Lists
5. Accessing Www Eresearchengine Net Index Phpsearchwiring Diagram For 1985 Chevy Monte Carlo Free and Paid eBooks
    - Www Eresearchengine Net Index Phpsearchwiring Diagram For 1985 Chevy Monte Carlo Public Domain eBooks
    - Www Eresearchengine Net Index Phpsearchwiring Diagram For 1985 Chevy Monte Carlo eBook Subscription Services
    - Www Eresearchengine Net Index Phpsearchwiring Diagram For 1985 Chevy Monte Carlo Budget-Friendly Options
6. Navigating Www Eresearchengine Net Index Phpsearchwiring Diagram For 1985 Chevy Monte Carlo eBook Formats
    - ePub, PDF, MOBI, and More
    - Www Eresearchengine Net Index Phpsearchwiring Diagram For 1985 Chevy Monte Carlo Compatibility with Devices
    - Www Eresearchengine Net Index Phpsearchwiring Diagram For 1985 Chevy Monte Carlo Enhanced eBook Features
7. Enhancing Your Reading Experience
    - Adjustable Fonts and Text Sizes of Www Eresearchengine Net Index Phpsearchwiring Diagram For 1985 Chevy Monte Carlo
    - Highlighting and Note-Taking Www Eresearchengine Net Index Phpsearchwiring Diagram For 1985 Chevy Monte Carlo
    - Interactive Elements Www Eresearchengine Net Index Phpsearchwiring Diagram For 1985 Chevy Monte Carlo
8. Staying Engaged with Www Eresearchengine Net Index Phpsearchwiring Diagram For 1985 Chevy Monte Carlo
    - Joining Online Reading Communities
    - Participating in Virtual Book Clubs

    - Following Authors and Publishers Www Eresearchengine Net Index Phpsearchwiring Diagram For 1985 Chevy Monte Carlo
9. Balancing eBooks and Physical Books Www Eresearchengine Net Index Phpsearchwiring Diagram For 1985 Chevy Monte Carlo
    - Benefits of a Digital Library
    - Creating a Diverse Reading Collection Www Eresearchengine Net Index Phpsearchwiring Diagram For 1985 Chevy Monte Carlo
10. Overcoming Reading Challenges
    - Dealing with Digital Eye Strain
    - Minimizing Distractions
    - Managing Screen Time
11. Cultivating a Reading Routine Www Eresearchengine Net Index Phpsearchwiring Diagram For 1985 Chevy Monte Carlo
    - Setting Reading Goals Www Eresearchengine Net Index Phpsearchwiring Diagram For 1985 Chevy Monte Carlo
    - Carving Out Dedicated Reading Time
12. Sourcing Reliable Information of Www Eresearchengine Net Index Phpsearchwiring Diagram For 1985 Chevy Monte Carlo
    - Fact-Checking eBook Content of Www Eresearchengine Net Index Phpsearchwiring Diagram For 1985 Chevy Monte Carlo
    - Distinguishing Credible Sources
13. Promoting Lifelong Learning
    - Utilizing eBooks for Skill Development
    - Exploring Educational eBooks
14. Embracing eBook Trends
    - Integration of Multimedia Elements
    - Interactive and Gamified eBooks

Www Eresearchengine Net Index Phpsearchwiring Diagram For 1985 Chevy Monte Carlo Introduction

In the digital age, access to information has become easier than ever before. The ability to download Www Eresearchengine Net Index Phpsearchwiring Diagram For 1985 Chevy Monte Carlo has revolutionized the way we consume written content.

Whether you are a student looking for course material, an avid reader searching for your next favorite book, or a professional seeking research papers, the option to download Www Eresearchengine Net Index Phpsearchwiring Diagram For 1985 Chevy Monte Carlo has opened up a world of possibilities. Downloading Www Eresearchengine Net Index Phpsearchwiring Diagram For 1985 Chevy Monte Carlo provides numerous advantages over physical copies of books and documents. Firstly, it is incredibly convenient. Gone are the days of carrying around heavy textbooks or bulky folders filled with papers. With the click of a button, you can gain immediate access to valuable resources on any device. This convenience allows for efficient studying, researching, and reading on the go. Moreover, the cost-effective nature of downloading Www Eresearchengine Net Index Phpsearchwiring Diagram For 1985 Chevy Monte Carlo has democratized knowledge. Traditional books and academic journals can be expensive, making it difficult for individuals with limited financial resources to access information. By offering free PDF downloads, publishers and authors are enabling a wider audience to benefit from their work. This inclusivity promotes equal opportunities for learning and personal growth. There are numerous websites and platforms where individuals can download Www Eresearchengine Net Index Phpsearchwiring Diagram For 1985 Chevy Monte Carlo. These websites range from academic databases offering research papers and journals to online libraries with an expansive collection of books from various genres. Many authors and publishers also upload their work to specific websites, granting readers access to their content without any charge. These platforms not only provide access to existing literature but also serve as an excellent platform for undiscovered authors to share their work with the world. However, it is essential to be cautious while downloading Www Eresearchengine Net Index Phpsearchwiring Diagram For 1985 Chevy Monte Carlo. Some websites may offer pirated or illegally obtained copies of copyrighted material. Engaging in such activities not only violates copyright laws but also undermines the efforts of authors, publishers, and researchers. To ensure ethical downloading, it is advisable to utilize reputable websites that prioritize the legal distribution of content. When downloading Www Eresearchengine Net Index Phpsearchwiring Diagram For 1985 Chevy Monte Carlo, users should also consider the potential security risks associated with online platforms. Malicious actors may exploit vulnerabilities in unprotected websites to distribute malware or steal personal information. To protect themselves, individuals should ensure their devices have reliable antivirus software installed and validate the legitimacy of the websites they are downloading from. In conclusion, the ability to download Www Eresearchengine Net Index Phpsearchwiring Diagram For 1985 Chevy Monte Carlo has transformed the way we access information. With the convenience, cost-effectiveness, and accessibility it offers, free PDF downloads have become a popular choice for students, researchers, and book lovers worldwide. However, it is crucial to engage in ethical downloading practices and prioritize personal security when utilizing online platforms. By doing so, individuals can make the most of the vast array of free PDF resources available and embark on a journey of continuous learning and intellectual growth.

FAQs About Www Eresearchengine Net Index Phpsearchwiring Diagram For 1985 Chevy Monte Carlo Books

How do I know which eBook platform is the best for me? Finding the best eBook platform depends on your reading preferences and device compatibility. Research different platforms, read user reviews, and explore their features before making a choice. Are free eBooks of good quality? Yes, many reputable platforms offer high-quality free eBooks, including classics and public domain works. However, make sure to verify the source to ensure the eBook credibility. Can I read eBooks without an eReader? Absolutely! Most eBook platforms offer web-based readers or mobile apps that allow you to read eBooks on your computer, tablet, or smartphone. How do I avoid digital eye strain while reading eBooks? To prevent digital eye strain, take regular breaks, adjust the font size and background color, and ensure proper lighting while reading eBooks. What the advantage of interactive eBooks? Interactive eBooks incorporate multimedia elements, quizzes, and activities, enhancing the reader engagement and providing a more immersive learning experience. Www Eresearchengine Net Index Phpsearchwiring Diagram For 1985 Chevy Monte Carlo is one of the best book in our library for free trial. We provide copy of Www Eresearchengine Net Index Phpsearchwiring Diagram For 1985 Chevy Monte Carlo in digital format, so the resources that you find are reliable. There are also many Ebooks of related with Www Eresearchengine Net Index Phpsearchwiring Diagram For 1985 Chevy Monte Carlo. Where to download Www Eresearchengine Net Index Phpsearchwiring Diagram For 1985 Chevy Monte Carlo online for free? Are you looking for Www Eresearchengine Net Index Phpsearchwiring Diagram For 1985 Chevy Monte Carlo PDF? This is definitely going to save you time and cash in something you should think about.

Find Www Eresearchengine Net Index Phpsearchwiring Diagram For 1985 Chevy Monte Carlo :

pyramid asia english edition
pyrotronics pxl manual
qatar pwa condition of contract
qlogic qb 212 manual
quantitative analysis for management 11th edition pearson
quadratic formula solver answer in fraction
quelle apocalypse pour demain
python network programming cookbook
quest rotational dynamics answer key
qualcast lawn mower manual
quantity surveying dimension paper template

quantity surveting nquestion papers
pythagorean theorem and its converse answers
qlab user guide
pwani university 1st year names of 2015 2016

Www Eresearchengine Net Index Phpsearchwiring Diagram For 1985 Chevy Monte Carlo :

Cadette Babysitting Badge Worksheet.pdf Cadette Babysitting Badge Worksheet.pdf Babysitter.pdf (If you attend a course that includes first aid training, that course completes both this step and step 1 of the Cadette First Aid badge.) OR. Interview five ... Cadette Babysitter Badge To earn this badge, complete the requirements in Cadette Babysitter Badge Requirements. Find out where to place Brownie badges & insignia. Girl Scout badges ... Cadette Babysitter Badge Requirements This 8-page pamphlet provides the steps needed for the Cadette age level girl to earn her Babysitter Badge. Badge sold separately. Pamphlet is three-hole ... 32 Cadette GS ~ Babysitting Badge ideas Aug 20, 2018 - Cadette Girl Scout ~ Babysitting Badge. See more ideas about babysitting, babysitter, babysitting kit. BABYSITTER CADETTE BADGE REQUIREMENTS This 8-page pamphlet provides the steps needed for the Cadette age level girl to earn her Babysitter Badge. Badge sold separately. Pamphlet is three-hole ... Girl Scouts - Safe Sitter® Safe Sitter® programs help Girl Scouts meet requirements for their Independence Badge, Babysitting Badge, and First Aid Badge. Compare program options below ... Cadette Babysitter How-To Guide This guide will help you work through the babysitter badge with your Girl Scout Cadette. ... Badge Requirement: Practice your babysitting skills. Supplies Needed. Cadette Babysitter Download - Step 1: How Kids Develop Included with the Cadette Babysitter badge download. It's very different when you're babysitting a two-year-old rather than an eight-year old. Introduction to Digital Culture:... by Nicholas, Tessa Joseph Introduction to Digital Culture: Living and Thinking in an Information Age brings together essays on the phenomenon of the Internet and its influence on the ... Introduction to Digital Culture : Living and Thinking in an ... In a series of accessible readings, this unique anthology explores the ways in which the everyday use of digital media shapes our lives and culture. The essays ... Introduction To Digital Culture Living And Thinking In An ... Are you searching for an extensive. Introduction To Digital Culture Living And. Thinking In An Information Age summary that checks out the significant ... Introduction To Digital Culture Living And Thinking In An ... Invite to our comprehensive publication testimonial! We are delighted to take you on a literary journey and study the depths of Introduction To Digital. Introduction to Digital Culture Living and Thinking in an ... Introduction to Digital Culture : Living and Thinking in an Information Age. Author. Tessa Joseph-Nicholas. Item Length. 9in. Publisher. Cognella, Inc. Item ... Introduction to Digital Culture Living and Thinking ... The essays examine various perspectives on topics relevant to students including online identity, the ethics of online presence, video games and online role- ... Introduction to Digital Culture : Living

and Thinking in an Infor Quantity. 1 available ; Item Number. 276155095185 ; Book Title. Introduction to Digital Culture : Living and Thinking in an Infor ; ISBN. 9781609271503 ; Accurate ... Introduction to Digital Culture Introduction to Digital Culture: Living and Thinking in an Information Age · Books Related to This Book · Expographic. Digital Culture (DIGC) < University of Pennsylvania DIGC 2200 Design Thinking for Digital Projects. Design thinking as a strategy and toolkit is usually defined as having five stages: Empathize, Define the ... SIDE MOOC: Introduction to Digital Culture - YouTube Sessions Clock National Repair Center All Sessions mantle and wall clocks are repaired in our national service center location. We receive shipments every day from around the world at our clock ... Sessions Repair / Rebuild Service - Time Only Wall Clock ... The Listed Price Of $175.00 Includes The Following: Any bushings the clock movement needs. This clock movement will receive at least 8+ bushings. Cleaning and ... Sessions – National Clock Repair Ship Your Clock for Expert Repairs! Expert Shipping Instructions! ... Grandfather Clock Service Calls. We make Grandfather Clock service calls! Please CONTACT US! Servicing a Sessions American No. 2 mantel clock, Part I Sep 20, 2016 — I am going to take you, the reader, through the process I follow when servicing a clock. There will be several posts in this series. Sessions Mantle Clock adjustments - NAWCC Forum Dec 29, 2022 — I have restored a Seth Thomas mantle clock many years ago. So I understand the mechanics of cleaning and getting the beat on an old clock works. Antique Sessions Clocks | Merritt's Clocks & Supplies Welch had become the Sessions Clock Company, and the production of all clock parts ... CS-23260 Sessions Willard Mantle Clock. $95.00. Page 1 of 1. CLOCKS. Sessions Antique Clocks Syracuse NY ... Sessions Antique Clocks Syracuse NY, Sessions Antique Clock Repair, Restoration, Refinishing. The Clock Professor Syracuse NY. Call (315) 484-2165.